YANMAR
MARINE DIESEL ENGINES

530~1130hp

6LAA(M)-UTE/8LAA(M)-UTE/12LAA(M)-UTE

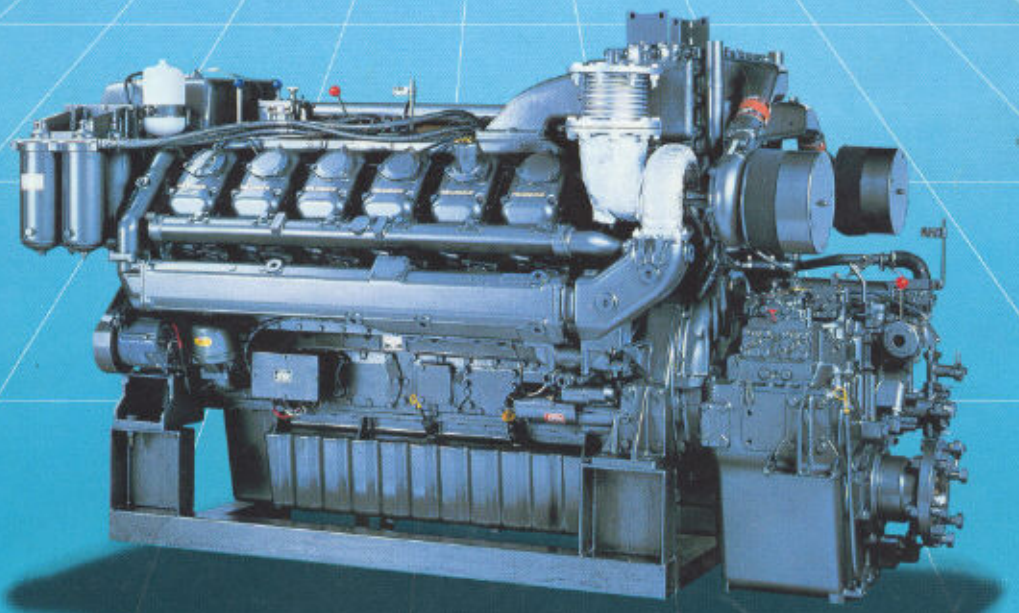

12LAA-UTE

SUMITOMO CORPORATION
(SUMITOMO SHOJI KAISHA, LTD.)
C. P. O. Box 1524, Tokyo, 100-91, Japan
Telex: J22202, J22203
Cable Address: Sumitomo Tokyo
※ SECTION IN CHARGE
Industrial Machinery Dept.

A Powerlift without Pricelift

The well-known rugged power of the LA series gets even more muscle with the introduction of the UT versions.
What's the secret?
We've put into the UT versions the results of years of research and a whole new generation of diesel technology to keep size, weight and price down and power up by as much as 235hp in the 12 LAA-UTE! Three important developments make this possible.

1. A sophisticated fuel pump acting with greater pressure and super-accurate timing help achieve almost 100% combustibility.

2. The latest hi-temperature materials are used to match the improved performance in parts such as the cylinder head and piston rings.

3. Four valves per cylinder, precision *timed, give total feed and exhaust* capabilities.

And its improved turbocharger and intercooler work to maximize power output.

Other assets of the LA-UT versions include a useful inspection window in the block for quick visual checks, and a constant hot water cooling system for non-fluctuating operation; both cost-cutting advantages.

ENGINE SPECIFICATIONS

Model (with marine gear)		6LAA-UTE	8LAA-UTE	12LAA-UTE
Model (without marine gear)		6LAAM-UTE	8LAAM-UTE	12LAAM-UTE
Type		4-cycle, vertical, turbo-charged, water cooled diesel engine		
Number of cylinders		6 in-line	8-vee	12-vee
Bore × stroke	mm (in)	148 × 165 (5.83 × 6.50)		
Displacement	ℓ (cu.in)	17.03 (1039.2)	22.7 (1385.2)	34.1 (2080.9)
Continuous rating output hp/rpm	with marine gear	530/1850	650/1850	1000/1850
	without marine gear	550/1850	670/1850	1035/1850
Maxmum output hp/rpm	with marine gear	580/1900	715/1900	1100/1900
	without marine gear	600/1900	737/1900	1130/1900
Fuel consumption (without marine gear)	gr/hp.h	158	160	159
Direction of rotation		Counterclockwise viewed from stern		
Combustion system		Direct injection		
Cooling system		Fresh water cooling with seawater & fresh water pumps		
Lubricating system		Forced lubrication with gear pump		
Starting system		Electric starting motor (DC 24V)		
Dry weight (without marine gear)	kg (lbs)	1890 (4167)	2420 (5336)	3300 (7276)

MARINE GEAR SPECIFICATIONS

Engine model: 6LAA-UTE

Model	YX180				YX180L	
Type	Hydraulic multi-disc clutch, wet type					
Reduction ratio (forward)	2.08	2.55	3.03	3.50	4.00	4.54
Propeller shaft speed (at cont. rating) rpm	889	725	611	529	463	407
Direction of rotation (propeller shaft)	Clockwise or counterclockwise viewed from stern					
Dry weight kg (lbs)	500 (1102)					

Engine model: 8LAA-UTE

Model	YX350E				YX350L		MGN86E				MGN86EL		MGN87L	
Type	Hydraulic multi-disc clutch, wet type													
Reduction ratio (forward)	2.25	2.67	3.11	3.51	4.08	4.52	2.06	2.44	2.93	3.40	3.93	4.48	4.90	5.54
Propeller shaft speed (at cont. rating) rpm	822	693	595	527	453	409	899	758	634	544	471	413	378	334
Direction of rotation (propeller shaft)	Clockwise or counterclockwise viewed from stern													
Dry weight kg (lbs)	900 (1985)				1350 (2970)		720 (1588)				900 (1985)		1450 (3197)	

Engine model: 12LAA-UTE

Model	MGN332				YX350E				YX350L		MGN624		
Type	Hydraulic multi-disc clutch, wet type												
Reduction ratio (forward)	1.00	1.45	2.04	2.38	2.25	2.67	3.11	3.51	4.08	4.52	4.00	4.56	5.00
Propeller shaft speed (at cont. rating) rpm	1850	1276	907	777	822	693	595	527	453	409	463	406	370
Direction of rotation (propeller shaft)	Clockwise or counterclockwise viewed from stern												
Dry weight kg (lbs)	566 (1234)				900 (1985)				1350 (2970)		1550 (2991)		

PERFORMANCE CURVES

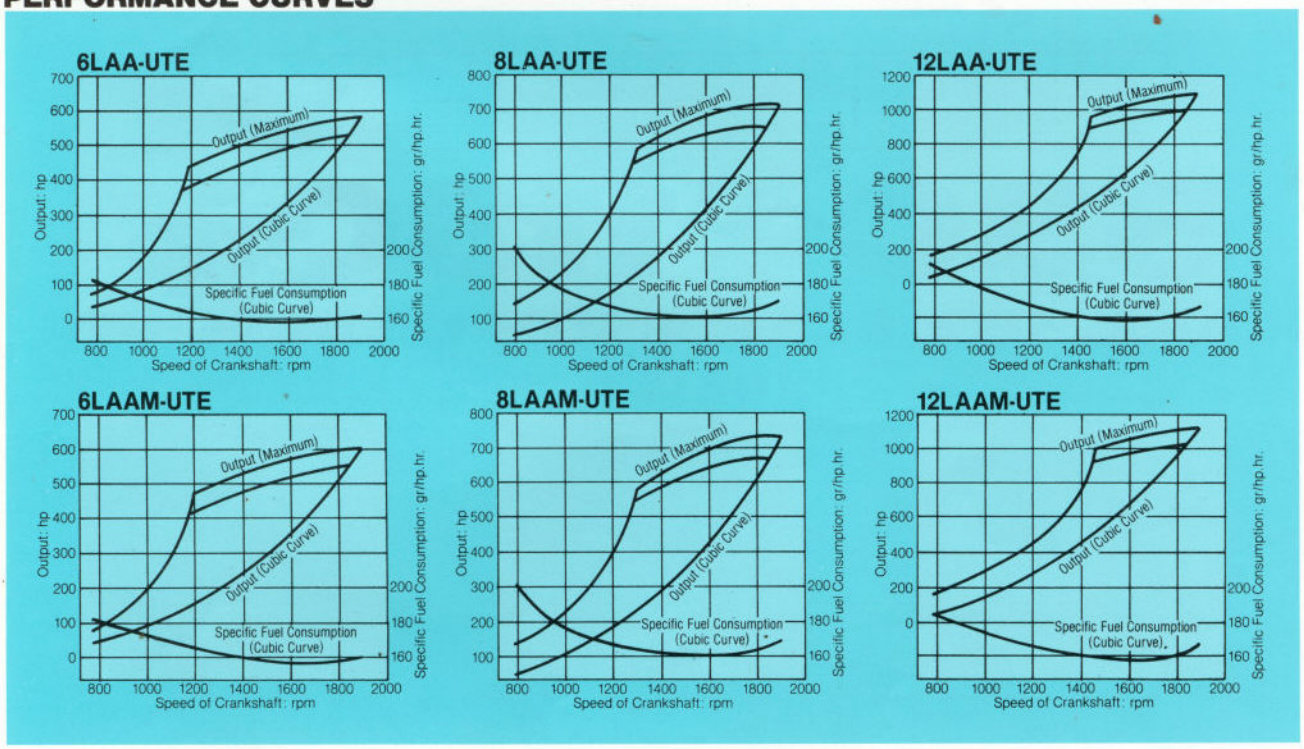

DIMENSIONS

6LAA(M)-UTE

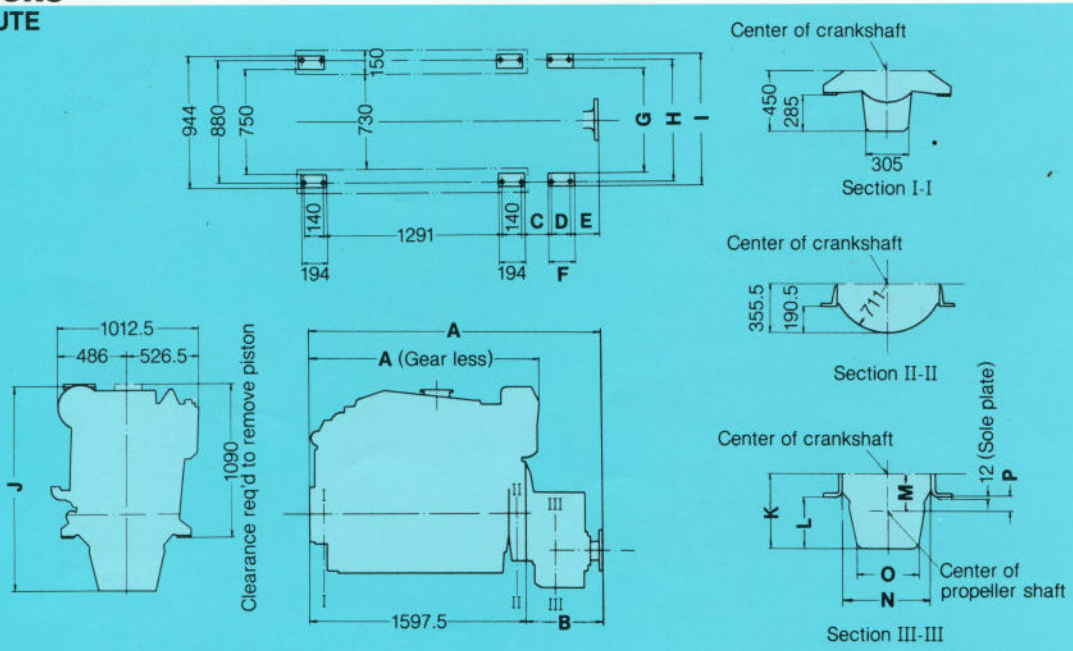

Unit = mm

Model	A	B	C	D	E	F	G	H	I	J	K	L	M	N	O	P
6LAAM-UTE	1718.5	—	—	—	—	—	—	—	—	1342	—	—	—	—	—	—
6LAA-UTE×YX180	2123	525.5	169.5	120	235.5	174	752	880	936	1414	522	357	267	740	390	102
6LAA-UTE×YX180L	2157.4	559.9	184.5	120	254.4	174	792	914	970	1532	640	475	330	792	520	165

8LAA(M)-UTE

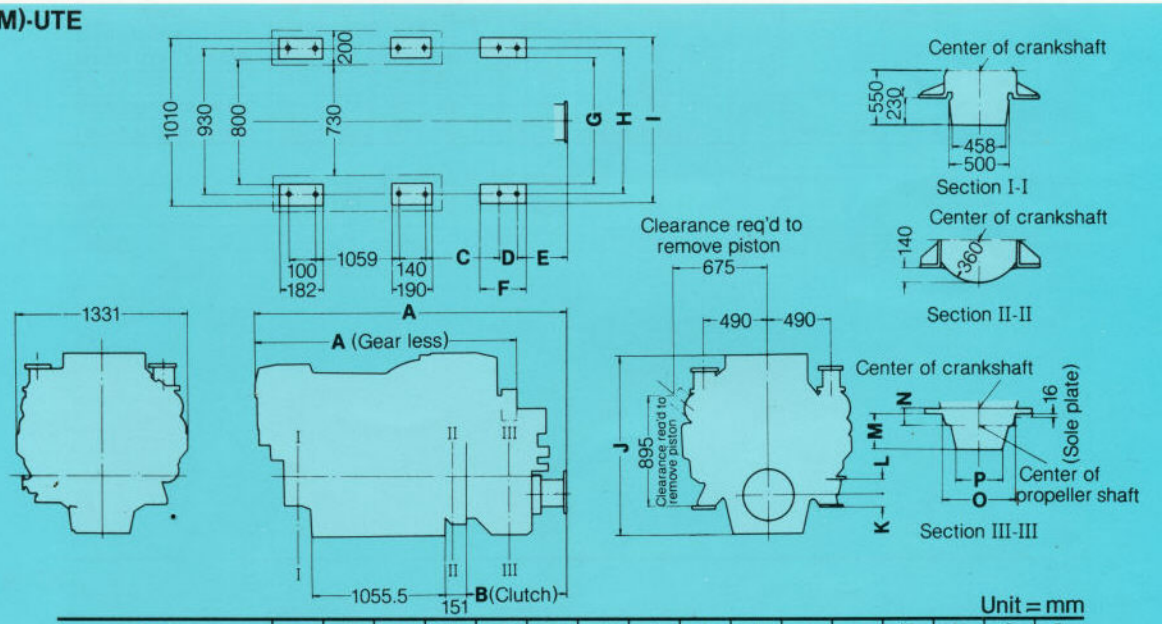

Unit = mm

Model	A	B	C	D	E	F	G	H	I	J	K	L	M	N	O	P
8LAAM-UTE	1980	—	—	—	—	—	—	—	—	1420	—	—	—	—	—	—
8LAA-UTE×YX350E	2434	798	366.4	130	328.6	275	800	900	960	1470	82	48	425	138	800	540
8LAA-UTE×YX350L	2472	836	201	130×2	402	320	920	1020	1080	1635	—	15	445	235	880	640
8LAA-UTE×MGN86E	2333	610	168	140	329	215	800	930	1010	1523	—	65	333	285	635	330
8LAA-UTE×MGN86EL	2323	605	171	140	321	230	980	1040	1120	1670	—	138	480	358	670	400
8LAA-UTE×MGN87L	2361	560	177	140	270	240	1130	1190	1270	1903.5	—	253.5	713	473.5	910	480

12LAA(M)-UTE

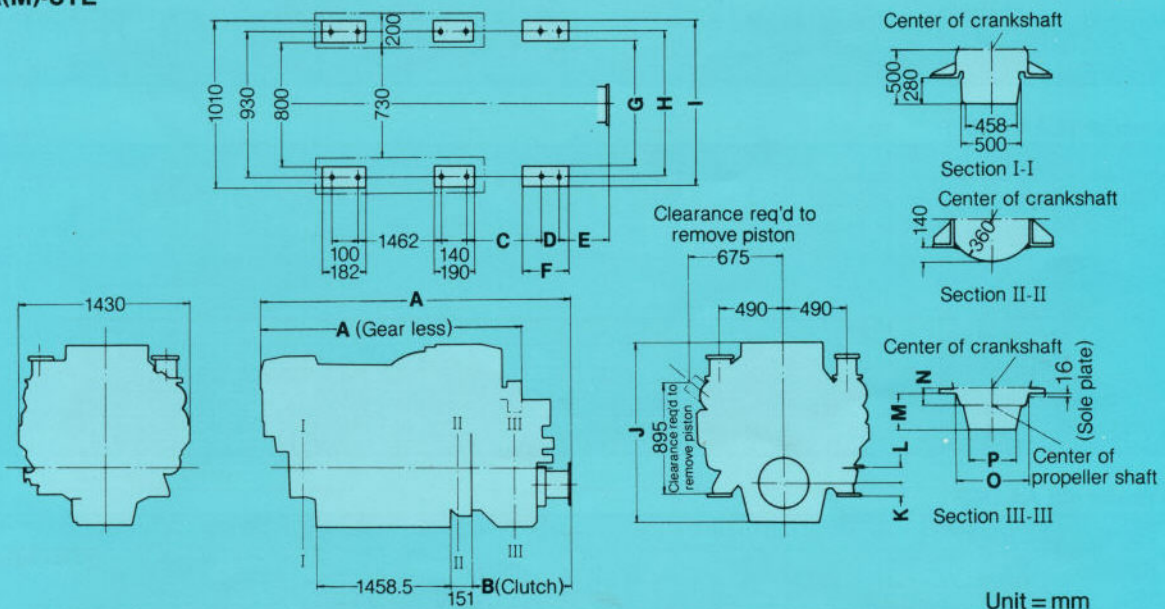

Unit = mm

Model	A	B	C	D	E	F	G	H	I	J	K	L	M	N	O	P
12LAAM-UTE	2583	—	—	—	—	—	—	—	—	1470	—	—	—	—	—	—
12LAA-UTE×YX350E	2878	798	366.4	130	328.6	275	800	900	960	1470	82	90	425	138	800	540
12LAA-UTE×YX350L	2916	836	201	130×2	402	320	920	1020	1080	163.5	—	15	445	235	880	640
12LAA-UTE×MGN332	2850	770	279	110	408	280	800	930	1010	1470	—	15	265	235	530	330
12LAA-UTE×MGN624	2840	760	274	140	373	280	1070	1190	1290	1740	—	163	550	383	750	450

STERN ARRANGEMENT

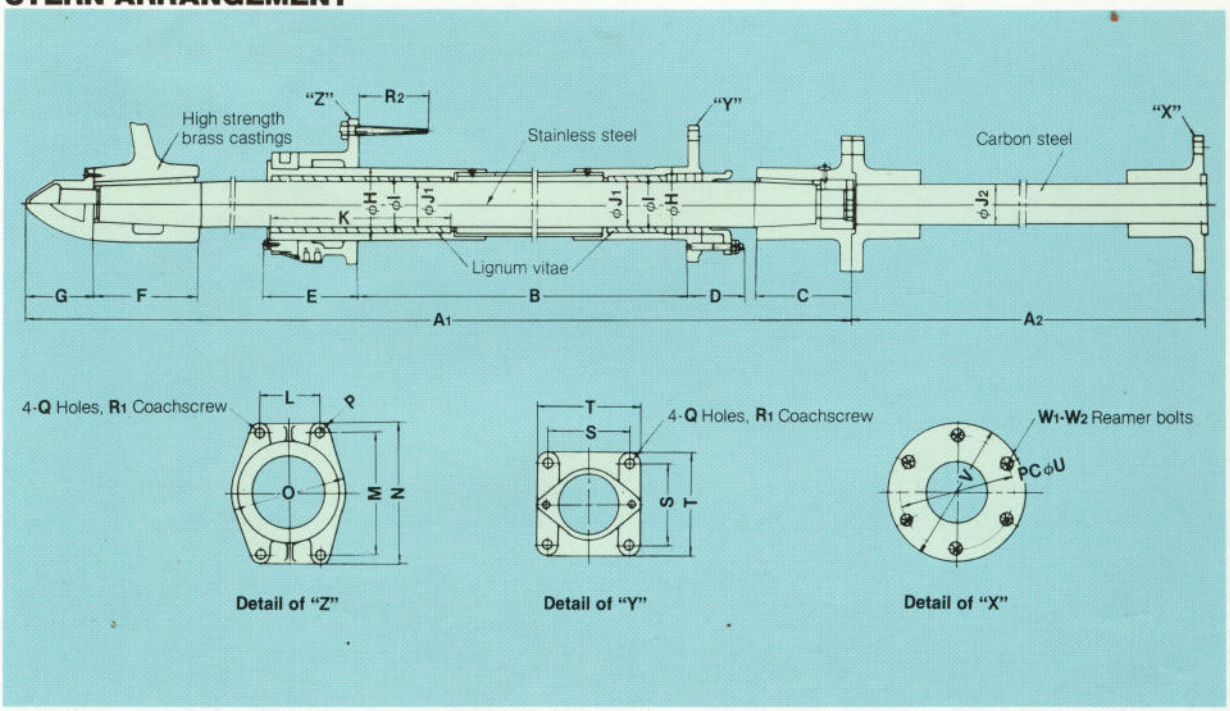

Engine model: 6LAA-UTE

Unit = mm

Model	Gear ratio	A_1	A_2	B	C	D	E	F	G	H	I	J_1	J_2	K	L	M	N	O	P	Q	R_1	R_2	S	T	U	V	W_1-W_2	3-blade propeller D×P×D.A.R (inch)
YX180	2.08	2250	1300	1350	204	123	165	185	110	132	106	80	75	320	110	240	276	210	18	18	16	120	160	196	250	300	6-28	41×22½×0.55
	2.55	2460	1500	1500	179	123	165	185	110	137	111	85	80	340	110	240	276	210	18	18	16	120	160	196	250	300	6-28	46×26½×0.55
	3.03	2485	1500	1500	189	123	181	205	140	142	116	90	85	360	110	250	294	225	22	22	20	138	165	209	250	300	6-28	50½×30×0.50
	3.50	2500	1500	1500	189	126	181	215	140	150	120	95	90	380	110	250	294	225	22	22	20	138	170	214	250	300	6-28	54½×34×0.45
YX180L	4.00	2575	1500	1500	209	126	206	230	150	160	126	100	95	400	130	270	314	250	22	22	20	138	180	224	260	310	6-28	59×37½×0.45
	4.54	2625	1500	1500	225	126	207	250	150	175	138	110	95	440	140	290	338	260	22	22	20	138	185	229	260	310	6-28	63×41½×0.45

Engine model: 8LAA-UTE

Unit = mm

Model	Gear ratio	A_1	A_2	B	C	D	E	F	G	H	I	J_1	J_2	K	L	M	N	O	P	Q	R_1	R_2	S	T	U	V	W_1-W_2	3-blade propeller D×P×D.A.R (inch)
YX350E	2.25	2485	1500	1500	189	123	181	205	140	142	116	90	85	360	110	250	294	225	22	22	20	138	165	209	290	350	8-32	45×24×0.55
	2.67	2500	1500	1500	189	126	181	215	140	150	120	95	90	380	110	250	294	225	22	22	20	138	170	214	290	350	8-32	49½×27½×0.55
	3.11	2575	1500	1500	209	126	206	230	150	160	126	100	90	400	130	270	314	250	22	22	20	138	180	224	290	350	8-32	54×31×0.55
	3.51	2575	1500	1500	209	126	206	230	150	160	126	100	95	400	130	270	314	250	22	22	20	138	180	224	290	350	8-32	57½×34×0.50
YX350L	4.08	2625	1500	1500	225	126	207	250	150	175	138	110	100	440	140	290	338	260	22	22	20	138	185	229	340	400	8-30	63×37½×0.45
	4.52	2625	1500	1500	225	126	207	250	150	175	138	110	105	440	140	290	338	260	22	22	20	138	185	229	340	400	8-30	66½×40½×0.45
	4.82	2700	1500	1500	241	126	215	257	150	190	148	120	105	480	150	310	358	280	22	22	20	138	210	254	340	400	8-30	69×43×0.40
MGN86E	2.06	2460	1500	1500	179	123	165	185	110	137	111	85	80	340	110	240	276	210	18	18	16	120	160	196	260	320	6-27	43×21×0.60
	2.44	2485	1500	1500	189	123	181	205	140	142	116	90	85	360	110	250	294	225	22	22	20	138	165	209	260	320	6-27	47×24×0.55
	2.93	2500	1500	1500	189	126	181	215	140	150	120	95	90	380	110	250	294	225	22	22	20	138	170	214	260	320	6-27	52½×27½×0.50
	3.40	2575	1500	1500	209	126	206	230	150	160	126	100	95	400	130	270	314	250	22	22	20	138	180	224	260	320	6-27	57×31×0.50
MGN86EL	3.93	2625	1500	1500	225	126	207	250	150	175	138	110	100	440	140	290	338	260	22	22	20	138	185	229	300	348	8-25	61×37×0.45
	4.48	2625	1500	1500	225	126	207	250	150	175	138	110	105	440	140	290	338	260	22	22	20	138	185	229	300	348	8-25	66×41×0.45
MGN87L	4.90	2700	1500	1500	241	126	215	275	150	190	148	120	105	480	150	310	358	280	22	22	20	138	210	254	340	400	8-30	69½×44×0.40
	5.54	2700	1500	1500	241	126	215	275	150	190	148	120	110	480	150	310	358	280	22	22	20	138	210	254	340	400	8-30	74×48½×0.40

Engine model: 12LAA-UTE

Unit = mm

Model	Gear ratio	A_1	A_2	B	C	D	E	F	G	H	I	J_1	J_2	K	L	M	N	O	P	Q	R_1	R_2	S	T	U	V	W_1-W_2	3-blade propeller D×P×D.A.R (inch)
MGN332	1.45	2485	1500	1500	189	123	181	205	140	142	116	90	85	360	110	250	294	225	22	22	20	138	165	209	210	245	12-20	37½×19×0.85
	1.80	2500	1500	1500	189	126	181	215	140	150	120	95	90	380	110	250	294	225	22	22	20	138	170	214	210	245	12-20	44×20×0.75
	2.04	2575	1500	1500	209	126	206	230	150	160	126	100	95	400	130	270	314	250	22	22	20	138	180	224	210	245	12-20	47×22×0.70
	2.38	2625	1500	1500	225	126	207	250	150	175	138	110	100	440	140	290	338	260	22	22	20	138	185	229	210	245	12-20	51×25×0.65
YX350E	2.25	2575	1500	1500	209	126	206	230	150	160	126	100	95	400	130	270	314	250	22	22	20	138	180	224	290	350	8-32	49½×24½×0.60
	2.67	2625	1500	1500	225	126	207	250	150	175	138	110	100	440	140	290	338	260	22	22	20	138	185	229	290	350	8-32	55×28½×0.60
	3.11	2625	1500	1500	225	126	207	250	150	175	138	110	105	440	140	290	338	260	22	22	20	138	185	229	290	350	8-32	59½×32×0.60
	3.51	2700	1500	1500	241	126	215	275	150	190	148	120	110	480	150	310	358	280	22	22	20	138	210	254	290	350	8-32	64×35×0.55
YX350L	4.08	2850	1500	1500	261	126	225	295	190	205	156	130	115	520	160	320	368	300	22	22	20	138	220	264	340	400	8-30	69½×39½×0.50
	4.52	2850	1500	1500	261	126	225	295	190	205	156	130	120	520	160	320	368	300	22	22	20	138	220	264	340	400	8-30	73½×42½×0.45
MGN624	4.00	2850	1500	1500	261	126	225	295	190	205	156	130	120	520	160	320	368	300	22	22	20	138	220	264	340	400	8-30	69½×39×0.50
	4.56	2850	1500	1500	261	126	225	295	190	205	156	130	120	520	160	320	368	300	22	22	20	138	220	264	340	400	8-30	74×42×0.45
	5.00	3000	1500	1500	300	126	235	315	210	220	170	140	130	560	170	330	378	320	22	22	20	138	230	274	340	400	8-30	78½×44½×0.40

ACCESSORIES

	Name of accessories		6LAA(M)-UTE	8LAA (M)-UTE	12LAA(M)-UTE
Installation	Foundation plate for wooden bed		2 ●	2 ●	2 ●
	Chock liner for steel bed		6 △	6 △	6 △
	Bolt & Nut set for wooden bed		12 ●	12 ●	12 ●
	Bolt & Nut set for steel bed		12 △	12 △	12 △
	Leveling screw (jack bolt) for wooden bed		6 ●	6 ●	6 ●
	Alignment side jack bolt kit		8 ●	8 ●	8 ●
	Alignment adjusting shim	(Engine & Yanmar gear)	8 ●	8 ●	8 ●
		(Engine & Nico gear)	8 ●	8 ●	8 ●
	Distance piece for wooden bed (for YX-350E, L)		—	2 ●	2 ●
Air	Exhaust gas pipe		1 ●	2 ●	2 ●
	V-type funnel (for vee type arranged cylinder)		—	1 △	1 △
	Exhaust gas silencer (dry type)		1 △	2 △	2 △
	Exhaust flexible joint (turbo-charge outlet)		1 ●	2 ●	2 ●
	Breather hose with fittings		1 ●	1 ●	2 ●
	Engine room ventilator	(DC 24V 70m³/min)	1 △	2 △	2 △
	Intake air filter		1 ●	2 ●	2 ●
Fuel oil	Drain separator (mounted on hull)		1 ●	1 ●	2 ●
	Filter		1 ●	1 ●	1 ●
	Fuel oil feed pump (mechanical)		1 ●	1 ●	2 ●
	Fuel oil primary filter		1 △	1 △	1 △
	Fuel oil pipe	(tank to engine)	1 ●	1 ●	1 ●
		(engine to tank)	1 ●	1 ●	1 ●
	Filter	(double)	1 ●	1 ●	—
		(fourth)	—	—	1 ●
Lubrication oil	Evacuation hand pump		1 ●	1 ●	1 ●
	Centrifugal type oil cleaner		1 ●	1 ●	1 ●
	Wing pump primer		1 △	1 △	1 △
Cooling system	Heat exchanger		1 ●	1 ●	1 ●
	Kingston cock for wooden hull		1 ●	1 ●	1 ●
	Kingston valve for steel hull		1 △	1 △	1 △
	Raw water pipe & fittings		1 ●	1 ●	1 ●
	Raw water filter		1 ●	1 ●	1 ●
	Fresh water sub tank		1 ●	1 ●	1 ●
Bilge pump	Electric type (DC 24V)		1 △	1 △	1 △
	Rubber type (Yanmar marine gear driven)		1 △	1 △	1 △
Remote control	Control head (Yanmar original)	twin lever	1 ●	1 ●	1 ●
		single lever	1 △	1 △	1 △
	Push-pull cable (Yanmar original)	5m	2 △	2 △	2 △
		6m	2 △	2 △	2 △
		7m	2 △	2 △	2 △
		8.5m	2 △	2 △	2 △
		10m	2 ●	2 ●	2 ●

	Name of accessories		6LAA(M)-UTE	8LAA (M)-UTE	12LAA(M)-UTE
Operation	Delux instrument panel (with alarm buzzer)		1 ●	1 ●	1 ●
	Wire harness	4m	1 △	1 △	1 △
		6m (3m × 2)	1 △	1 △	1 △
		8m (4m × 2)	1 △	1 △	1 △
		10m (3m × 2, 4m × 1)	1 △	1 △	1 △
		12m (4m × 3)	1 ●	1 ●	1 ●
	Exhaust gas thermometer (turbo inlet)		2 △	4 △	4 △
	Boost pressure gauge		1 ●	1 ●	1 ●
Front Power take-off device	Housing & mounting	(Yanmar original)	1 ●	1 ●	1 ●
		SAE No.3	1 △	1 △	1 △
	150P.C. Pulley with 5/12 grooves for A type		1 △	1 △	1 △
	Flexible coupling (DS)		1 △	1 △	1 △
Electric device	Starting motor	5.5kW DC 24V	2 ●	2 ●	—
		7.0kW DC 24V	—	—	2 ●
	Charging Alternator	600W (24V/25A)	1 ●	—	—
		1kW (24V/25A)	—	1 ●	1 ●
	Battery switch		1 ●	1 ●	1 ●
	Battery (Local procurement)	12V 120AH	4	—	—
		12V 150AH	—	4	4
Others	Onboard spare parts kit		1 ●	1 ●	1 ●
	Daily maintenance tool kit		1 ●	1 ●	1 ●
	Workshop tool kit		1 △	1 △	1 △
	Exhaust gas turbocharger blower wash liquid		1 △	1 △	1 △
	Water jacket scale solvent		1 △	1 △	1 △
	Anti-corrosion agent for fresh water		1 △	1 △	1 △
	Operation manual		1 ●	1 ●	1 ●
	Service manual		1 △	1 △	1 △
	Parts book		1 △	1 △	1 △
Stern gear	Half coupling for intermediate shaft		1 ●	1 ●	1 ●
	Shaft & stern tube		1 △	1 △	1 △
	Propeller		1 △	1 △	1 △
Onboard spare parts	Anti-corrosion zinc	Heat exchanger	4 ●	4 ●	4 ●
		L.O. cooler	2 ●	2 ●	2 ●
		Air cooler	4 ●	4 ●	4 ●
		Marine gear (Yanmar)	2 ●	2 ●	2 ●
		Marine gear (Nico)	2 ●	2 ●	2 ●
	Raw water pump impeller		1 ●	1 ●	1 ●
	Intake air filter		1 ●	2 ●	2 ●
	Fuel oil filter element		2 ●	2 ●	4 ●
	Lube oil filter element		2 ●	2 ●	4 ●

Remark: ●: Standard △: Optional —: Not available

INSTRUMENT PANEL CONTAINS FOLLOWING ITEMS (STANDARD)

Detail of instrument panel

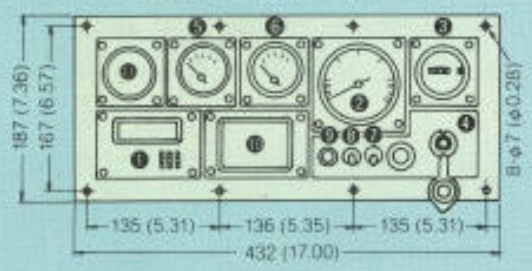

1. Yanmar marine quartz clock
2. Tachometer (electric type)
3. Hour meter (electric type)
4. Starting switch
5. L.O. pressure gauge
6. F.W. temperature gauge
7. Illumination light & switch
8. Fuse
9. Alarm buzzers
   - ● L.O. pressure low (engine, marine gear)
   - ● F.W. temperature high
   - ● F.W. level low
10. Alarm lamps
   - ● L.O. pressure low
   - ● L.O. filter bypassed
   - ● F.W. temperature high
   - ● F.W. level low
   - ● Battery no-charging
11. Boost pressure gauge

TATKO
MAKINA TICARET
T. A. Ş.
Gayrettepe - İSTANBUL
CEMBERCI

Note: All data subject to alteration without notice.

YANMAR DIESEL ENGINE CO.,LTD.
OVERSEAS OPERATIONS DIVISION
1-1, 2-chome, Yaesu, Chuo-ku, Tokyo 104, Japan
Telex: 0222-4733 Telephone: 03-275-1111
Facsimile: 03-272-0687 Cable: YANMAR TOKYO

60A2842 8803 Printed in JAPAN