INDUSTRIAL ENGINE

SA12V140-1

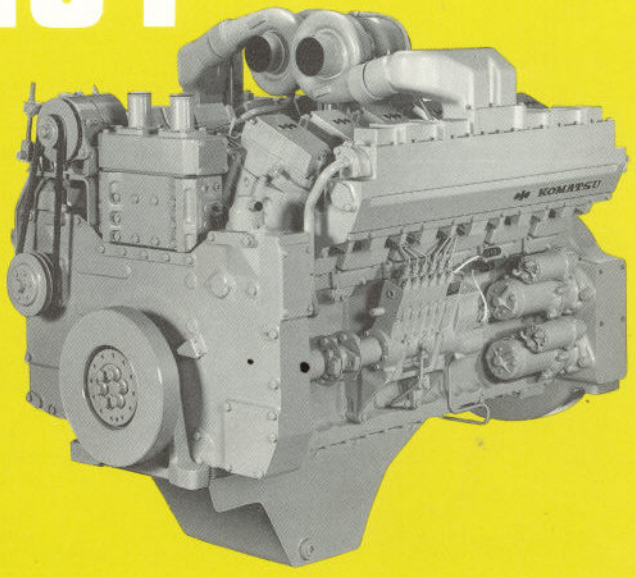

SPECIAL FEATURES

11 EYLUL 1996

High quality: The SA12V140-1 diesel engine is a true achievement of our total engine production system–from the casting of components, all the way through machining processes using Komatsu-made machine tools to final assembly.

High reliability: Based on Komatsu's proven success with various engine manufacturing technologies, the SA12V140-1 diesel engine will power all heavy-duty construction equipment with outstanding reliability and durability.

Economical operation: The direct-injection system and special fuel-minimizing design of the SA12V140-1 provide maximum economy. Low lube oil consumption is also a remarkable advantage.

Lightweight and compact design: Advanced design and an efficient production system make Komatsu diesel engines compact and lightweight, enhancing overall versatility.

Wider applications: A wide range of optional equipment offer a variety of applications to meet all specific customers' requirements.

Low-noise operation: Ideal designing keeps engine noise and vibration to a minimum.

SPECIFICATIONS

	Metric	English
Power rating:		
Intermittent (at 2100 RPM):	783 kW	1050 HP
Continuous (at 2000 RPM):	599 kW	804 HP
Type	**4-cycle,water-cooled, direct-injection**	
Aspiration	**Turbocharged and after-cooled**	
Cylinder arrangement	**12 vee**	
Bore x stroke	**140 x 165 mm**	**5.51" x 6.50"**
Piston displacement	**30.5 ltr**	**cu.in**
Compression ratio	**15:1**	
Lube system oil capacity (including bypass filter)	**74 ltr**	**19.6 U.S. Gal**
Coolant capacity	**85 ltr**	**22.5 U.S. Gal**
Dry weight(approx.)	**2780 kg**	**6,130 lb**
Dimensions:		
Length	**1670 mm**	**64.75"**
Width	**1160 mm**	**45.67"**
Height	**1525 mm**	**60.04"**

KOMATSU

SA12V140-1 DESIGN FEATURES

Cylinder head: One-cast iron alloy for each cylinder simplifies maintenance. The fuel injection nozzle is centrally located in a cast-in liner, toward which three water jets are directed through drilled holes to control the nozzle and the head temperature. Two intake ports; one tangential to cylinder bore, the other spirally shaped; produce optimum swirl for combustion. Exhaust ports are made extremely short to reduce both flow and heat transfer losses to that maximum amount of energy is available at the turbocharger turbine.

Cylinder block: Designed using modern techniques such as FEM (Finite Element Method), the block is very compact and lightweight, yet has high rigidity with internal ribs and reinforcement. Wet type, easy-to-replace cylinder liner is made of special cast iron alloy and tuftride-treated for scuff-resistance and low oil consumption. Coolant flow inlets to the liner jacket are located at two places for each cylinder for uniform cooling and suppression of liner cavitation.

Piston and piston rings: Pistons are made of ductile cast iron to increase thermal strength and improve fuel consumption with high top ring design. Two compression rings and one oil control ring. The top compression ring is barrel-faced keystone type, while the second compression ring is a taper-faced inner-cut type. The oil control ring is M-shaped steel ring with a coil expander.

Crankshaft: Single piece, eight-balance type made of forged alloy steel. Large diameter pin and main journal provide ample bearing area. Both pin and main journal fillet radii are induction hardened for maximum strength. Torsional damper are equiped for the reduction of torsional vibration.

Connecting rods: Made of forged alloy steel. Cap screws are tightened into plastic region by using Plastic Region Tightening Method in order to provide uniform and high clamping load.

Valve mechanism: Two inlet and two exhaust valves per cylinder. High camshaft location and rigid valve train components secure a smooth valve motion. Swing-type cam-followers are used for their proven durability. Double valve springs accommodate a high seating capacity in various speed range.

Lubrication system: Three-tandem gear pump provide ample lub oil capacity. In-block oil line prevents oil leakage. A thermostat valve is incorporated in the oil cooler: controls oil temperature to reduce parasitic losses. A spin-on full flow filter can be mounted either on the engine or remotely.

Cooling system: Gear driven, centrifugal water pump sends coolant water to the cylinder liner jacket via oil cooler. There the water goes up into the cylinder head, then back to the return manifold cast in the cylinder block. The system has been designed for minimum heat rejection to the coolant.

Injection system: In-line Bosch pump tuned for high injection pressure. A connector pipe placed through a hole in the rocker housing supplies high pressure fuel from the injection pipe to the fuel nozzle. This construction minimizes the injection pipe length and hence pressure loss. Mechanical injection timer, all-speed and min-max speed governors are available.

Intake and exhaust system: Komatsu KTR110 turbocharger with low inertia and high total efficiency is used. Pulse reserving exhaust manifolds improve transient response.

DIMENSIONS Unit: mm

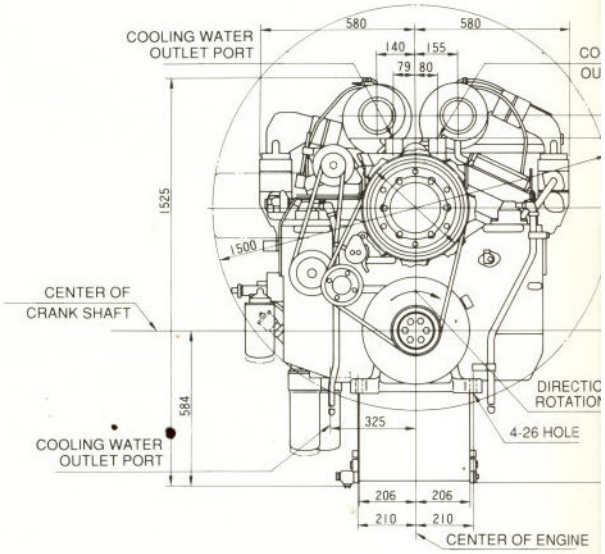

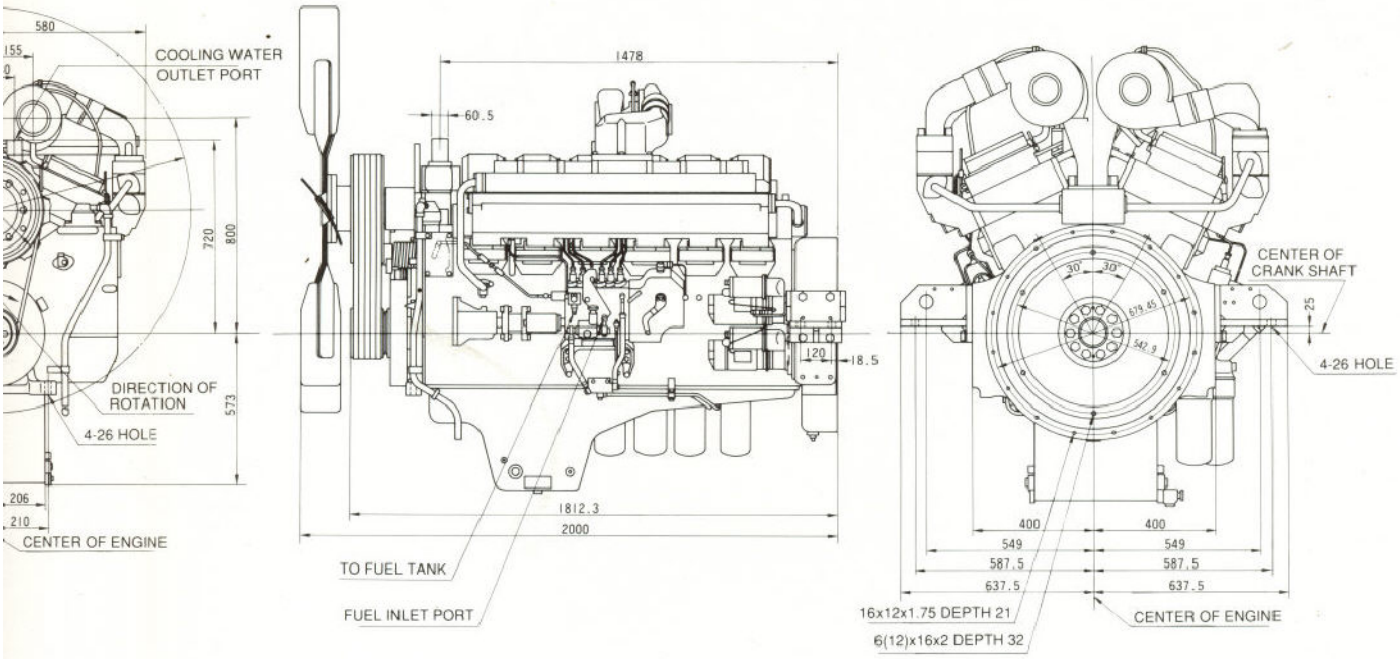
580
155
COOLING WATER
OUTLET PORT
720
800
DIRECTION OF
ROTATION
573
4-26 HOLE
206
210
CENTER OF ENGINE
1478
60.5
120
18.5
1812.3
2000
TO FUEL TANK
FUEL INLET PORT
30
30
679.45
542.9
CENTER OF
CRANK SHAFT
25
4-26 HOLE
400
400
549
549
587.5
587.5
637.5
637.5
16x12x1.75 DEPTH 21
6(12)x16x2 DEPTH 32
CENTER OF ENGINE

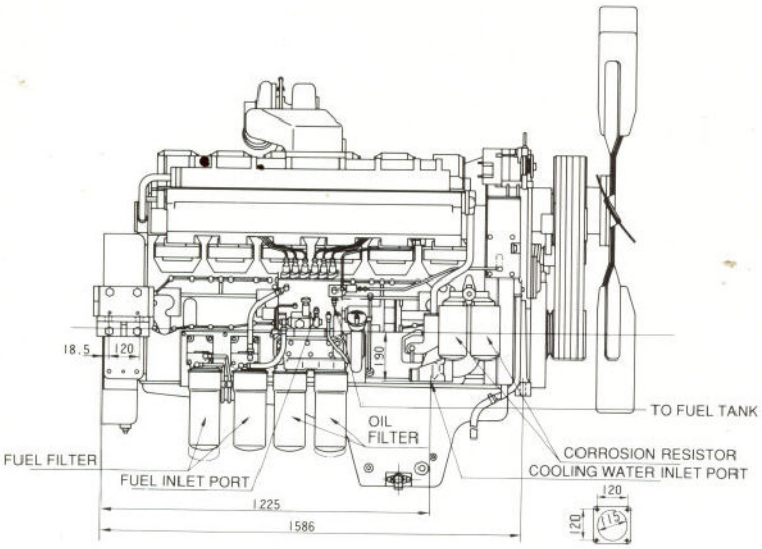
18.5
120
190
TO FUEL TANK
OIL
FILTER
FUEL FILTER
CORROSION RESISTOR
COOLING WATER INLET PORT
FUEL INLET PORT
120
1225
1586
120

PERFORMANCE

Performance curves

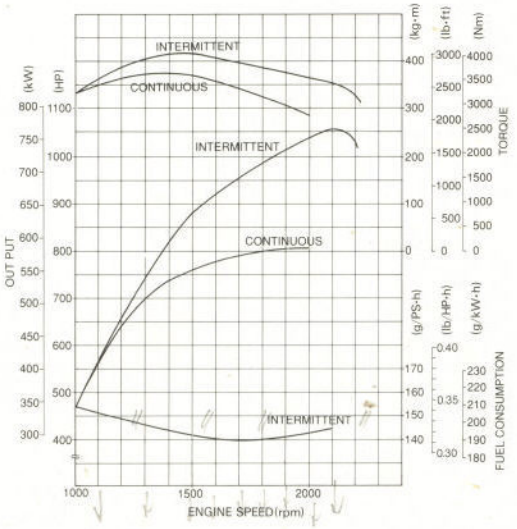

Horsepower, torque, and fuel consumption curves represent performance measured under the ambient conditions of S.A.E. J1349 standards.

- Barometric pressure: 99 kPa (29.2 in Hg)
- Temperature: 25°C (77°F)
- Water vapor pressure: 1 kPa (0.3 in Hg)

Rating

Intermittent: This rating conforms to DIN 6270, B-Horsepower "N_B" standards. This rating may be applied to intermittent load applications (Full-throttle operation does not exceed 60 minuites without interruption, and the average load factor is set at approx.40%).

Continuous: This rating conforms to DIN 6270, A-Horsepower "N_A" standards. This rating may be applied to constant load applications (Full-throttle for long period without ill-effect, and the average load factor is set at approx.70%)

Operating conditions: Including water pump, lubricating oil pump and fuel system, and excluding air clearner, muffler, alternator, compressor, fan, driven components and optional equipment.

Note: Rating curves represent a guideline only for selection. Actual power is varied to meet customer's requirements. This horsepower is obtainable with Komatsu's standard fuel pump setting.

STANDARD EQUIPMENT

- Intake manifold
- Turbo charger
- Exhaust manifold
- Exhaust elbow
- Flywheel housing (SAE #0)
- Flywheel (SAE No. 18)
- Oil pan
- Fuel filter (spin-on cartridge type)
- Oil filter (spin-on cartridge type)
- Corrosion resistor (spin-on cartridge type)
- Governor (mechanical all-speed control)
- Fan drive (V-belt drive)
- Wax type thermostat
- Starting motor (24V, 7.5kW x2) (with safety relay)
- Alternator (24V, 35A) (with regulator)
- Aftercooler

OPTIONAL EQUIPMENT

- Governor (electric type)
- Radiator
- Air cleaner
- Starting aid
- Muffler
- Heater (for cooling water, for lubricating oil)
- Mounting bracket
- Fan (blower, suction)

Materials and specifications are subject to change without notice.

KOMATSU

Form No. HESS9520

Printed in Japan 1430As/ (20)